HQ KK Wind Solutions A/S
Bøgildvej 3
DK-7430 Ikast

Phone +45 96 92 43 00
Fax +45 97 21 14 31
CVR 25 74 67 16

E-mail main@kkwindsolutions.com
Web www.kkwindsolutions.com

Wind Solutions®

Datasheet

WTC3 ACCELEROMETER

Sensor for measuring the accelerations of a wind turbine nacelle. The module is typically used to open the turbine safety loop when the nacelle accelerations exceed a threshold value, and as measurement device for active tower damping systems.

Datasheet revised: 2015-12-21. Version no. 0.12

We innovate to integrate®

Contents

1 Introduction

The WTC3 Accelerometer module is used to supervise the low frequency accelerations of a wind turbine nacelle. The measured accelerations can be continually read out by CAN communication interface. The CAN interface can also be used to program the module with an acceleration threshold level that will trig the relay output. When the accelerations are under the defined threshold, the relay will stay initiated (NO connected). When the accelerations are above the defined level, the relay will be released (NC connected). It stays released for at least 10 seconds even if the acceleration level decreases to less than the defined threshold level.
If no acceleration alarm level is transferred to the module via CAN, the relay will not be operated and remains released. Notice that special editions of the product exist, in which the acceleration alarm level have been preprogrammed into the module from the factory, see section 1.1, in these editions, a CAN connection is not necessary.
The module is typically used to open the turbine safety loop when the nacelle accelerations exceed a threshold value, but also as measurement device for active tower damping systems that uses the nacelle acceleration as input.

1.1 Part numbers

This datasheet covers the following part numbers.

V5509 ..... : Standard edition without preprogramed trigger level.
KK-MODUL288-S ..... : V031 replacement kit, V031 is used in 1.0 MW to 2.0MW turbines
KK-MODUL304-S ..... : V029 replacement kit, V029 is used in 600kW turbines

2 Important note

ESD (Electro Static Discharge) sensitive devices on Printed Circuit Board. Take the necessary precautions when working on ESD sensitive parts.

3 Features

- LED indicators for input / output status
- CAN-bus electrical interface
- Selectable CAN bitrate
- Selectable CAN address
- Module status read out via LEDs and CAN-interface
- Power supply 32VAC ±30% or 24VDC ±10%.
- Power supply monitoring
- Self-diagnostics
- On-board dual axis accelerometer
- Sensor range: +/- 1.2 G.
- Relay output NC/NO.
- Programmable acceleration alarm level for relay output
- Adjustable low and high pass filters for acceleration monitoring
- Ambient operation temperature: - 40 to +70 °C.
- Ambient storage temperature: - 40 to +85 °C.
- Complied standards: DS/EN 61000-6-2 and DS/EN 61000-6-4.
- Housing: Powder coated steel box.

4 Power supply

4.1 Input

Input voltage .....: 32VAC +/- 30% or 22..48 Vdc.
Input current .....: max. 0.3A @ min. input voltage
Max. inrush current.....: ~10A peak (source impedance ~ 1 ohm)
Input frequency.....: 47..63Hz
Fuse .....: Multifuse 0.9 Amp 60V
CPU time after power down .: min. 30 ms
Connector type.....: WAGO 231-133/001-000
Correspond to .....: WAGO 231-103/026-000

4.1.1 Connections for AC

Connector	*Pins*	*Function*
X3 – Supply Input	PE	GND
	0VAC	AC reference
	32VAC/24VDC	32VAC supply input

4.1.2 Connections for DC

Connector	*Pins*	*Function*
X3 – Supply Input	PE	0V Reference
	0VAC	Not connected
	32VAC/24VDC	24VDC supply input

4.2 Supervision

The power supply is supervised to protect the module from malfunctions due to power supply drops and errors in the internal power supplies.
If a power fail is detected the module disables the relay output and disconnects from the CAN bus. The module must be powered down to exit this safety state.

5 Environmental data

5.1 Temperature

Operating temperature range..... : -40..70°C
Storage temperature range ..... : -40..85°C

NOTE: In high altitudes the operation high limit will be reduces as seen below.

Altitude	< 1500 m	3000 m
Max operating temperature	70°C	63°C

5.2 Humidity

Operating humidity range..... : 5 - 90 %RH
Storage humidity range..... : 5 - 90 %RH

6 On-board sensors

6.1 Two axis accelerometer

Input range..... : +/- 1.2 G
Resolution ..... : 16 bit
Sample frequency ..... : 100 Hz
Nonlinearity % of full scale ..... : +/-0.5%
Factory calibration ..... : Software calibration of sensor by use of earth gravity.
Update interval (process telegram): 1..65535ms

7 Output

7.1 Relay output

Output type ..... : Relay output NC/NO
Max voltage (Circuit limitation) : 42 V
Max current (Circuit limitation): 0.2 A
Update rate ..... : 10ms
Connector type..... : WAGO 231-333/001-000
Correspond to ..... : WAGO 231-303/026-000

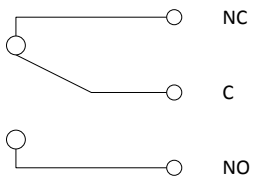

Relay specifications @ 25 °C:
Mechanical and electrical life[1] ..... : Min $100x10^6$ operations
Electrical contact rating ..... : Min $100x10^3$ operations, depending on type off load!
Contact Material ..... : Ag (Au-clad)
Typical operate / release time ..... : 2.5ms / 1.5ms
Max operate / release time ..... : 4ms / 4ms
Isolation Contact / Coil 50/60 Hz for 1 min . : 2,000 VAC
Approvals ..... : UL, CSA

NOTE: To improve life, external RC-networks must be applied.

Connector	*Pins*	*Function*
X4 – Relay	NO	Normally open
	C	Common
	NC	Normally closed

[1] Defined at resistive loads. At other loads, an external RC network must be used to extend life.

8 CAN-bus

Input / output control and measurement data are transferred via the CAN bus interface.
Detailed CAN bus information: bus configurations, cable specification, and line termination are available in: “Datasheet WTC3 CAN bus”.

8.1 CAN setup

Before the module is powered on, the CAN bus address and bitrate must be set.
Setup is done by the two rotate switches located in the ‘CAN SETUP’ area.

8.1.1 CAN address

The CAN address is set up by the rotate switch ‘ADDRESS’.

ADDRESS	Module address
0	Module disabled
1	1
2	2
3	3
4	4
5	5
6	6
7	7
8	8
9	9

8.1.2 CAN bitrate

The CAN bitrate is set up by the rotate switch ‘BITRATE’.

BITRATE	CAN bitrate
0	125kBit
1	250kBit
2	500kBit
3	1MBit

8.2 Electrical interface

Bus specification ..... : CAN 2.0B
Bus impedance..... : 120 Ω
Termination..... : 120Ω (Must be applied externally at end points)

Connector	*Pins*	*Function*
X1 – CAN IN	HI	CAN bus signal HI
	LO	CAN bus signal LO
	0V	CAN bus reference
	SHLD	CAN bus shield
X2 – CAN OUT	HI	CAN bus signal HI
	LO	CAN bus signal LO
	0V	CAN bus reference
	SHLD	CAN bus shield

8.3 Protocol

The protocol used for transferring data over the CAN bus is a process data based protocol with adjustable update times. For integrating the module into a standard PLC system a library is available.

8.4 Parameters

Several parameters can be set up via CAN, the following table lists the parameters:

Parameter	***Default***	***Function***
High pass X	0 Hz	High pass filter cut-off frequency for channel X, 0 means no filter.
Low pass X	0 Hz	Low pass filter cut-off frequency for channel X, 0 means no filter.
High pass Y	0 Hz	High pass filter cut-off frequency for channel Y, 0 means no filter.
Low pass Y	0 Hz	Low pass filter cut-off frequency for channel Y, 0 means no filter.
High pass relay trig	0 Hz	High pass filter cut-off frequency for relay trig, 0 means no filter.
Low pass relay trig	0 Hz	Low pass filter cut-off frequency for relay trig, 0 means no filter.
Threshold for relay trig	0 m/s^2	Acceleration threshold value for trigging the output relay. 0 means relay will never trig.
Time for relay trig	0 sec	Before the acceleration is compared to the threshold value above, it is average by this value.

9 Functional description

The module measures and filters accelerations in two axis's, called X and Y. The measured accelerations are available in the CAN interface and can be used for controlling the relay output. Separate filters can be set for controlling the relay and for exchanging data via CAN.

9.1 Signal path

The signal path of the module basically consists of two different paths called the measurement path and the relay path. The measurement path are for accleration values that can be read via CAN, and the relay path is for controlling the relay output. Below the signal path can be seen.

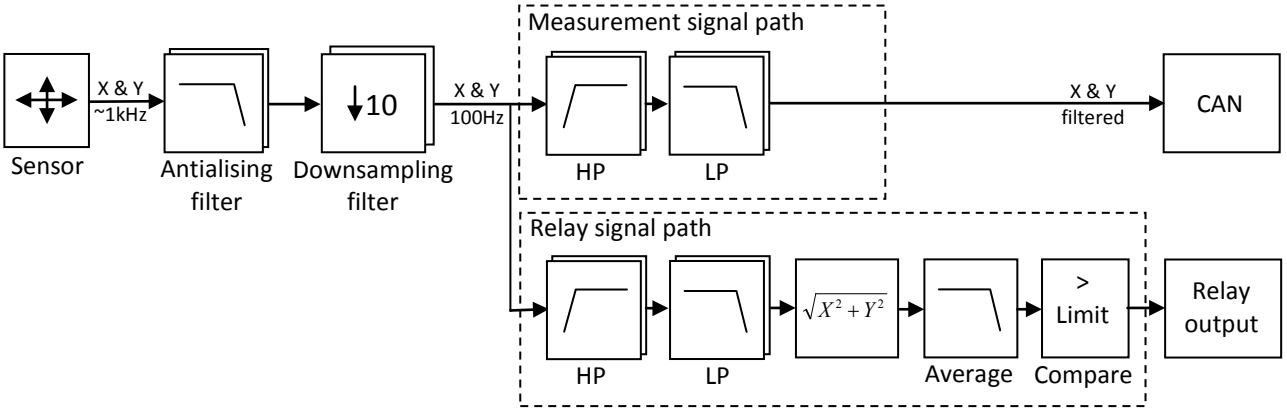

9.1.1 Antialiasing filter

The antialiasing filters, one for X and one for Y, are 1. order low-pass HW filters designed to have a -3 dB frequency at 50 Hz +20/-10 Hz in the whole operation temperature range.

9.1.2 Down sampling filter

The down sampling filters, one for X and one for Y, are for averaging and down sampling of the ~1 kHz sampled signal to the 100 Hz signal used for measurements. The filter is used to compensate for the variations in sample rate, due to temperature drift in the acceleration sensors PWM generator. The -3 dB frequency is set to 44 Hz. The frequency response can be seen below.

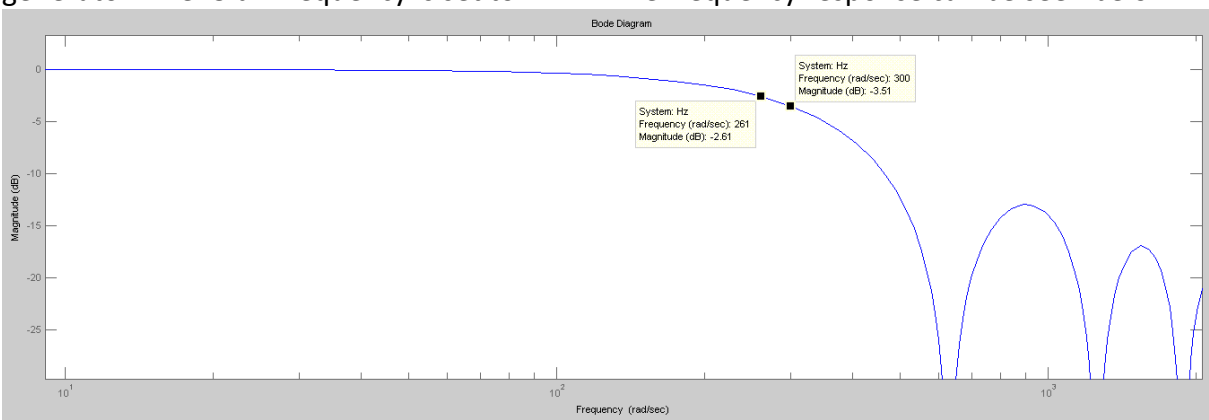

The plot below shows the total frequency response of the antialiasing filter and the down sampling filter.

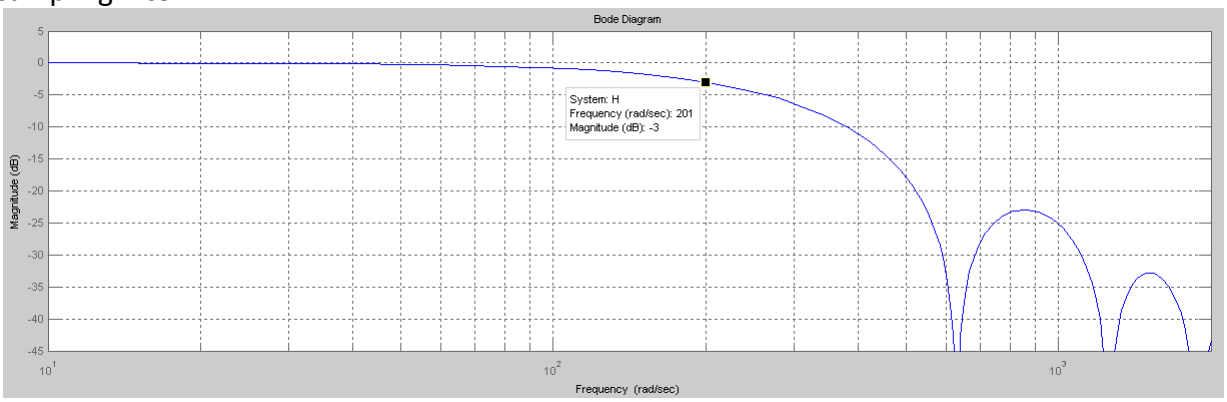

9.1.3 Adjustable filters

The high pass (HP) and low pass (LP) filters are all adjustable 2. order Butterworth filters. The filter parameters are described in section 7.4. Notice that for the measurement signal path, the X and Y filters can be set individually, for the relay signal path, the X and Y filters can only be set to the same cut-off frequency for both signals. Notice also that the filters can be disabled by setting the cut-off filter parameters to 0.

9.2 Relay output

As can be seen in the signal path shown in section 8.1, the relay output is controlled by comparing the measured and filtered acceleration to a limit given by a parameter. If the acceleration exceeds the parameter given limit, the relay is released, which typically opens the wind turbine safety loop. The relay will stays released for at least 10 seconds even if the acceleration level decreases to less than the set threshold level.
If no acceleration alarm level is transferred to the module via CAN, parameter “Threshold for relay trig”, the relay will not be operated and remains released. This is done for safety reasons, so a module without any valid parameters will keep the wind turbine safety loop open. However, variants of the product exist with preprogrammed (limits programmed in factory) threshold levels. These are intended for replacement of older vibration guard modules called V029 and V031 used in Bonus/Siemens turbines from 600KW to 2 MW. Below the variants with preprogrammed limits are described.

9.2.1 KK-MODUL288-S

This variants is a replacement for the V031 module used in 1.0 MW to 2.0MW Bonus/Siemens turbines. It is factory programed to act like the V031 G-Sensor with program ES516957, Label parameters are: G=0.045 V=0.3.

Note: The V031 G-Sensor only measures forces in one direction. Since the replacement measures in two directions, it can be more sensitive for vibrations in the other direction.

9.2.2 KK-MODUL304-S

This variants is a replacement for the V029 module used in 600 kW Bonus/Siemens turbines. It is factory programed to act like the V029 G-Sensor with program ES516957, Label parameters are: G=0.12 V=0.8.

Note: The V029 G-Sensor only measures forces in one direction. Since the replacement measures in two directions, it can be more sensitive for vibrations in the other direction.

10 LED indicators

Information about the module status is indicated by several LEDs placed in groups on the module.
Green LEDs ..... : Module related status indicators
Yellow LEDs ..... : Input status indicators
Red LEDs..... : Error indicators

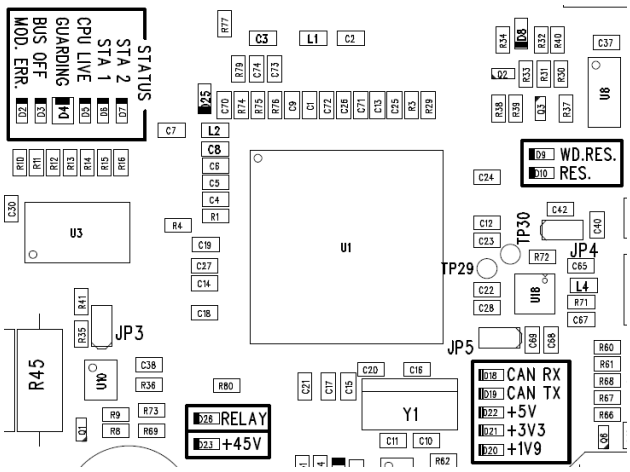

10.1 Module status

LED	*Colour*	*Status*	*Means*
+45V	Green	ON	32VAC / 24VDC input OK
		OFF	32VAC / 24VDC input missing
+1V9	Green	ON	Internal +1V9 supply OK
		OFF	Internal +1V9 supply missing
+3V3	Green	ON	Internal +3V3 supply OK
		OFF	Internal +3V3 supply missing
+5V	Green	ON	Internal +5V supply OK
		OFF	Internal +5V supply missing
RELAY	Yellow	ON	Acceleration < limit
		OFF	Acceleration > limit
STA 1	Red	ON	Module not stable
		OFF	Module stable
STA 2	Red	ON	Not used
		OFF	Not used
CPU LIVE	Yellow	STEADY	CPU not running
		FLASHING	CPU running: Normal operation: --_--_--_--_--_--_--_--_--_ No acceleration limit set: --____--____--____--____ Boot loader active: -_-_-____-_-_-____-_-_-
WD.RES.	Red	ON	External watchdog is resetting CPU
		OFF	Normal operation.
MOD. ERR.	Red	ON	A fatal module error was detected. Replace module.
		OFF	Normal operation.
BUS OFF	Red	ON	An error condition on the CAN bus caused the module to disconnect from the CAN bus.
		OFF	Normal operation.
GUARDING	Green / Red	OFF	Module has not yet been enabled via the CAN-bus. This is not an error condition.
		GREEN FLASHING	Toggle state every time a guard telegram is received via CAN bus, and guard function is enabled. The signal will start toggle 10 sec. after receiving the first SystemEnable telegram via CAN bus. This is not an error condition.
		RED FLASHING	Toggle state every time a guard telegram is received via CAN bus, and guard function is disabled. This mode is intended for debugging purposes. This is not an error condition.
		RED ON	A guard timeout occurred. Module is offline on the CAN bus. This is an error condition.
		GREEN ON	Not used
RES.	Red	ON	Module is in a reset condition, and is not operative.
		OFF	Normal operation.

10.2 CAN Rx/Tx

LED	*Colour*	*Status*	*Means*
CAN Tx	Green	ON	Indicating Tx activity on CAN bus
CAN Rx	Yellow	ON	Indicating Rx activity on CAN bus

11 Standards

11.1 EMC standards

DS/EN 61000-6-4:2007.....: Electromagnetic compatibility - Generic emission standard – Part 6 4: Industrial environment.

DS/EN 61000-6-2:2005.....: Electromagnetic compatibility - Part 6-2: Generic standards – Immunity for industrial environment. **Improved immunity for ESD, Burst and Surge.**

11.2 Vibration

Vibration random.....: IEC 60068-2-64
Vibration sine .....: IEC 60068-2-6
Bump .....: IEC 60068-2-29
Shock .....: IEC 60068-2-27

12 Module view

The module measures in two directions, below the definition of X and Y directions can be seen.

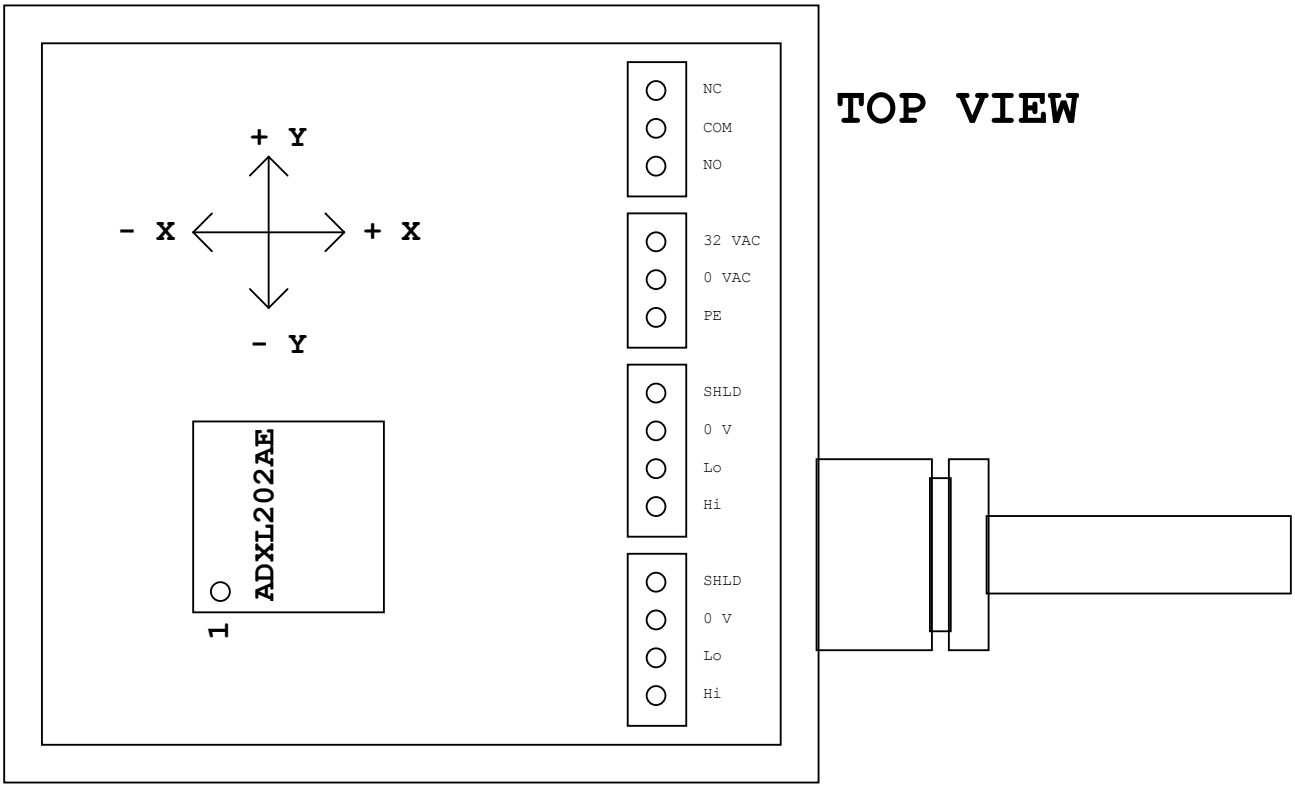

When measuring the earth gravitational field, the module will measure -1G /-9.82 m/s^2 in the Y-direction and 0 in the X-direction, when it is positioned as shown on the drawing above. In the drawing the minus Y-direction is pointing towards the center of the earth, and the X-direction perpendicular to the surface of the earth.

In typical turbine installations the module is placed with the cable glands pointing towards the rear end of the nacelle, meaning that the X-direction measures nacelle fore-aft accelerations, and the Y-direction measures nacelle side to side accelerations.

Connector placement

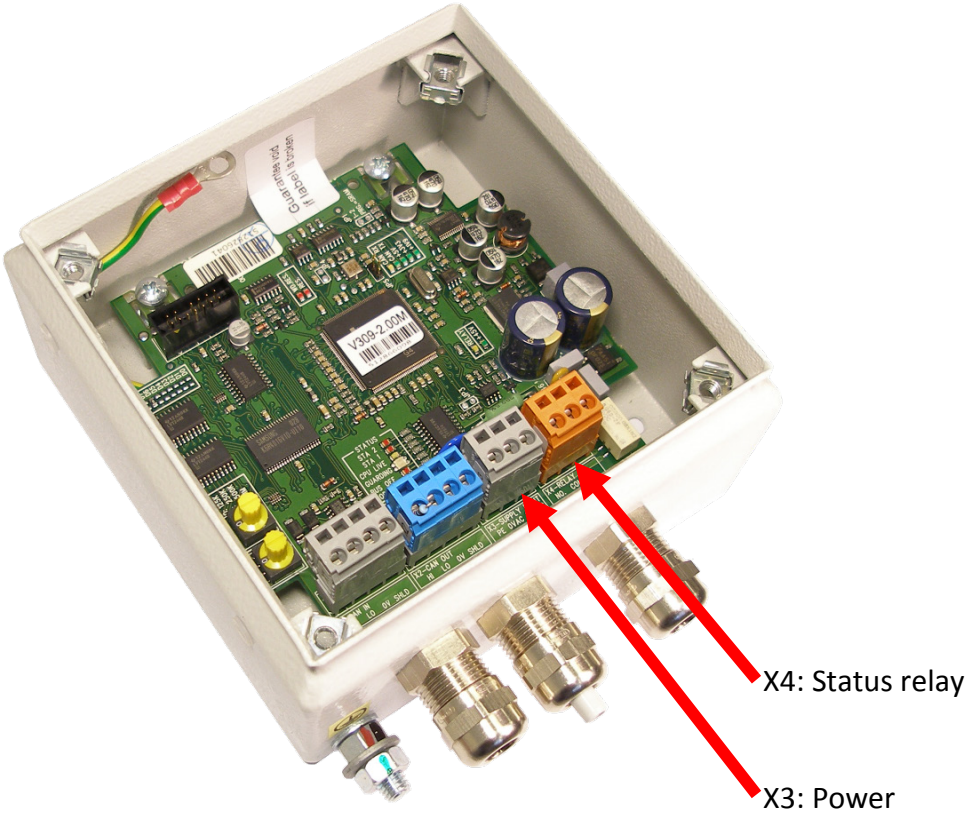

13 Mechanical

13.1 Mounting

Unit: mm

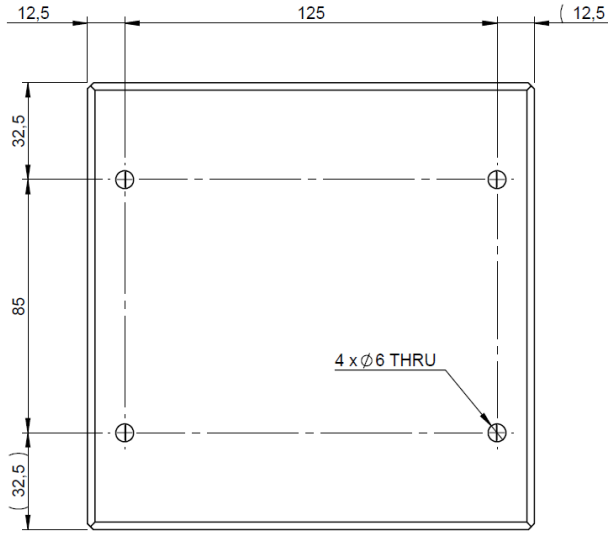

13.2 Dimension and weight

Height.....: 80 mm
Width.....: 150 mm
Depth.....: 150 mm
Weight.....: 1650 g

13.3 Mounting bracket

For the variants KK-MODUL288-S and KK-MODUL304-S a mounting bracket in included for easy replacement of the V029/V031. This is shown below.

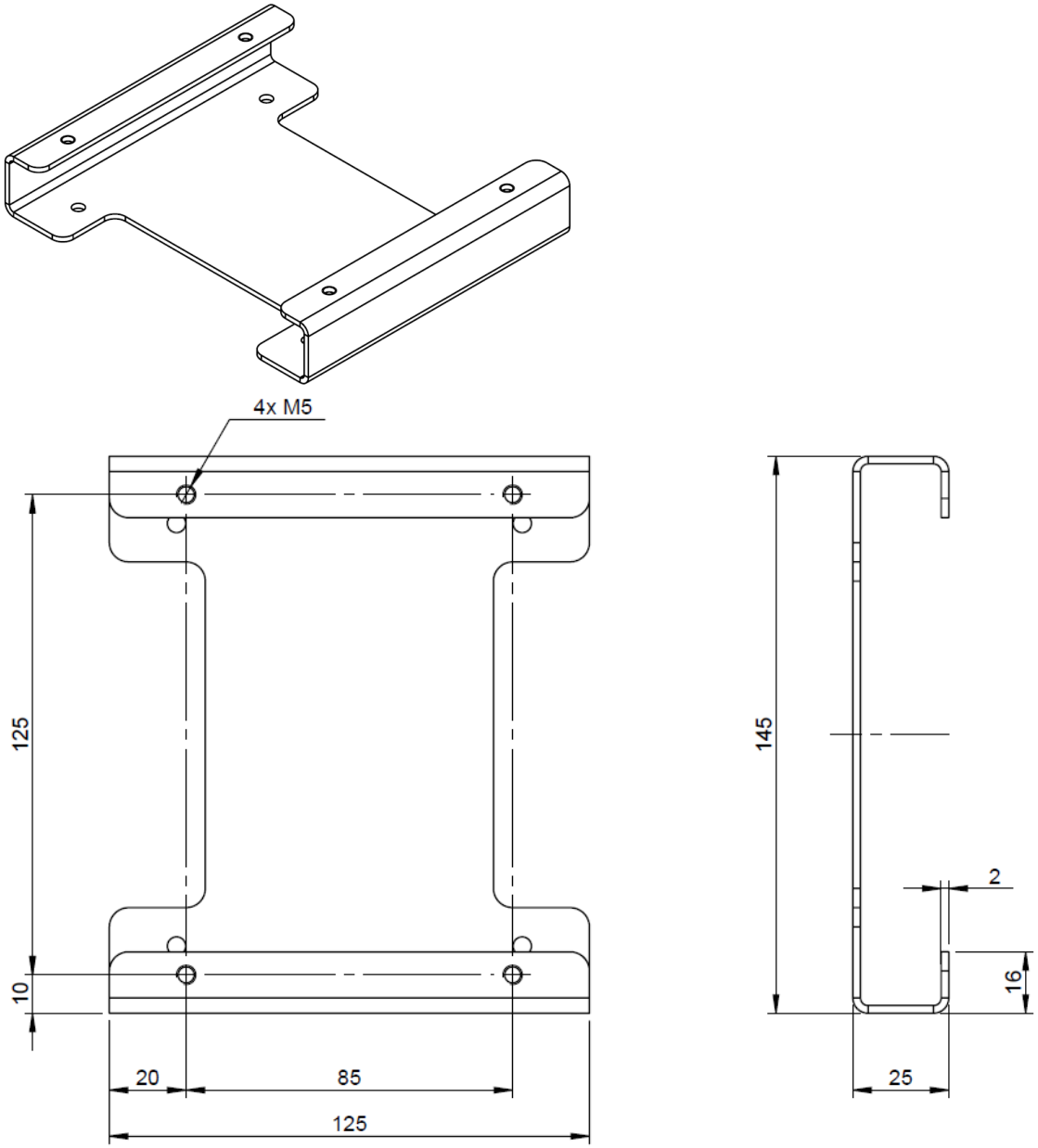

Liability note

This document has been prepared with care. The product described is, however, constantly under development. For this reason the document may not in every case have been checked for consistency with regards to performance data, standards or other characteristics to the products delivered. In the event that this document contains technical or editorial information not reflected in the products delivered, we reserve the right to make alterations to this document at any time and without prior warning. The data, diagrams, descriptions and other information in this document shall not in any way form the basis of a direct or indirect claim against us if the products have been delivered and the modifications in the products are not reflected in this document.